HITACHI

日立牌冲击电扳手
Impact Wrench

WR 22SA

使用说明书
HANDLING INSTRUCTIONS

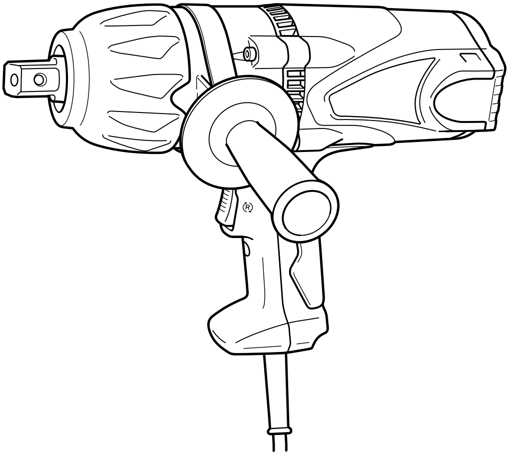

使用前务请详加阅读
Read through carefully and understand these instructions before use.

Hitachi Koki

1

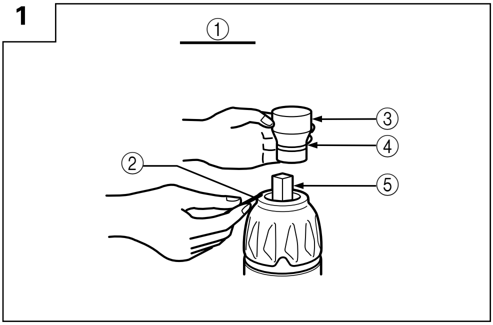
①
②
③
④
⑤

2

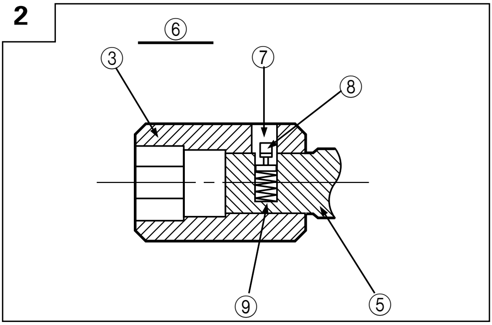
⑥
③
⑦
⑧
⑨
⑤

3

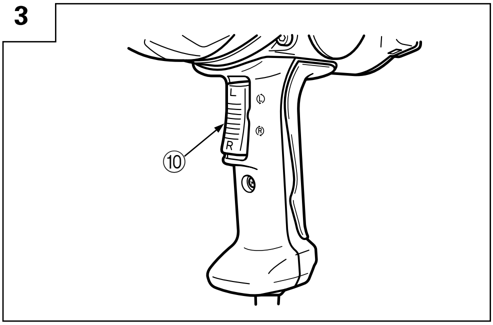
L
R
⑩

4

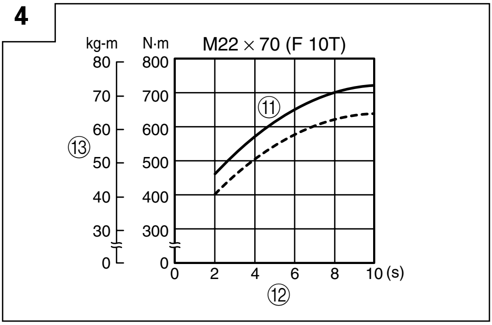
kg-m
N·m
M22 × 70 (F 10T)
80
70
60
50
40
30
0
800
700
600
500
400
300
0
0
2
4
6
8
10
(s)
⑪
⑫
⑬

①	锚钉 O型环式	Pin O-Ring type
②	插销	Pin
③	六角套筒	Hex. socket
④	套环	Ring
⑤	铁砧	Anvil
⑥	活塞式	Plunger type
⑦	孔	Hole
⑧	活塞	Plunger
⑨	弹簧	Spring
⑩	开关	Switch
⑪	额定	Rating
⑫	旋紧时间	Tightening time
⑬	旋紧转矩	Tightening torque

一般安全规则

警告！
请仔细阅读本说明书
若不遵守下列注意事项，可能会导致电击、火灾及/或严重伤害。
下述警告中的术语「电动工具」，指插电 (有线) 电动工具或电池 (无线) 电动工具。

请妥善保管本说明书

1) 工作场所
   a) **工作场所应打扫干净，并保持充分的亮度。**
      杂乱无章及光线昏暗容易导致事故。
   b) **请勿在易爆炸的环境中操作电动工具，如存在易燃液体、气体或粉尘的环境中。**
      电动工具产生的火花可能会点燃烟尘。
   c) **操作电动工具时，儿童与旁观者勿靠近工作场所。**
      工作时分神可能会造成工具失控。

2) 电气安全
   a) **电动工具插头必须与插座相配。**
      不得以任何形式改装插头。
      不得对接地的电动工具使用任何转接插头。
      原装插头及相配插座将会减少电击的危险。
   b) **应避免身体与大地或接地表面，如管道、散热器、炉灶、冰箱等的接触。**
      若身体接触大地或接地表面，更会增加电击的危险。
   c) **电动工具不可任其风吹雨打，或置于潮湿的环境中。**
      水进入电动工具也会增加电击的危险。
   d) **要小心使用电线。不要用电线提拉电动工具，或拉扯电线来拔下工具的插头。**
      电线应远离热源、油液，并避免接触到锐利边缘或转动部分。
      电线损坏或缠绕在一起会增加电击的危险。
   e) **在室外操作电动工具时，请使用专用延伸线缆。**
      使用专用延伸线缆可降低电击的危险。

3) 人身安全
   a) **保持高度警觉，充分掌握情况，以正常的判断力从事作业。**
      疲劳状态或服药、饮酒后，请勿使用电动工具。
      操作电动工具时，一时的疏忽都可能造成严重的人身伤害。
   b) **使用安全设备。始终配戴安全眼镜。**
      在适当条件下，使用防尘面罩、防滑胶鞋、安全帽或听觉保护装置等安全设备，都会减少人身伤害。
   c) **谨防误开动。插接电源前，请先确认开关是否已切断。**
      搬移电动工具时手指接触开关，或接通开关状态下插上电源插座，都容易导致事故。
   d) **开动前务必把调整用键和扳手类拆除下来。**
      扳手或键留在转动部分上，可能会造成人身伤害。
   e) **要在力所能及的范围内进行作业。作业时脚步要站稳，身体姿势要保持平衡。**
      这样在意外情况下可以更好地控制工具。
   f) **工作时衣服穿戴要合适。不要穿过于宽松的衣服或佩带首饰。头发、衣角和手套等应远离转动部分。**
      松散的衣角、首饰或长发都可能会卷入转动部分。
   g) **如果提供连接除尘和集尘的设备，请确认是否已经连接好并且使用正常。**
      使用这些设备可降低粉尘引起的危险。

4) 电动工具的使用和维护
   a) **不要使劲用力推压。应正确使用电动工具。**
      正确使用才能让工具按设计条件有效而安全地工作。
   b) **如果电动工具不能正常开关，切勿使用。**
      无法控制开关的电动工具非常危险，必须进行修理。
   c) **进行调整、更换附件或存放工具前，请拔下电源插头。**
      此类预防安全措施可减少误开动工具的危险。
   d) **闲置不用的工具，应存放在儿童接触不到的地方；不熟悉电动工具或本说明书的人员，不允许操作本工具。**
      未经培训的人员使用电动工具非常危险。
   e) **妥善维护工具。检查转动部分的对准、连接，各零件有无异常，及其它足以给工作带来不良影响的情况。**
      如有损坏，必须修理后才能使用。
      许多事故都是因工具维护不良引起的。
   f) **保持工具锋利、清洁。**
      正确维护工具，使其保持锋利，作业顺畅，便于控制。
   g) **请根据本说明书，按照特殊类型电动工具的方式，使用本工具、附件及钻头，并考虑作业条件及具体的作业情况。**
      电动工具用于规定外的作业，可能会导致危险状况。

5) 维修
   a) **本电动工具的维修必须由专业人员使用原配零件进行。**
      这样才能确保电动工具的安全性。

注意事项
不可让儿童和体弱人士靠近工作场所。
应将不使用的工具存放在儿童和体弱人士接触不到的地方。

使用冲击电扳手时的注意事项

1. 在高处使用本工具时，应确认底下是否有人。
2. 长时间使用本工具时，请使用耳塞。
3. 要改变扳手的旋转方向时，只能在马达完全停止后才能打开倒向开关。
4. 使用长的延长线时，请使用升压变压器。
5. 为了断定确实是使用了正确的旋紧转矩，请在使用本工具之前，用转矩扳手确认旋紧转矩。
6. 请用插销和套环，将套筒正确地装进冲击扳手上。
7. 请确认套筒内是否有裂缝。
8. 操作时，请紧紧握住冲击扳手的机身和边柄。否则，所产生的反作用力会导致不正确的操作，甚至会引起危险。

规 格

电压（按地区)*	(110伏，115伏，120伏，127伏，220伏，230伏，240伏) ∿
输入功率*	800瓦
无负荷速度	1800／分
旋紧能力** （螺母尺寸）	M16-M22（高张力螺母） M14-M24（普通螺母）
旋紧转矩	最大值 610N·m（62.2公斤 • 米）
交角传动	19毫米
重量（不带缆线）	4.8公斤

* 当须改变地区时应检查产品上的铭牌。

** 在额定电压的条件下拧紧螺母时，请勿使用延长线。

标 准 附 件

(1) 侧柄 1

(2) 盒子 1

标准附件可能不预先通告而予以更改。

选购附件（分开销售）

1. **套筒的丰富多样性**
   尽管日立牌冲击扳手在出厂时，只备有一个标准套筒，但您可买到多种多样的套筒，用于各种尺寸与类型的螺母的冲击旋转。

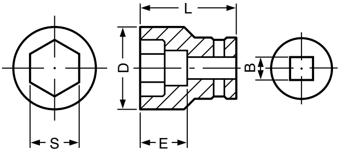

表1

B=19毫米

套筒设计	普通套筒 尺寸（毫米）				长形套筒 尺寸（毫米）			
	S	D	E	L	S	D	E	L
六角形套筒 22	22	32	32	60				60
23	23	38	29	55	23	33	32	60
24	24	40	29	55	24	34	32	85
26	26	42	29	55	26	38	57	85
27	27	43	29	55	27	39	57	85
29	29	45	29	55	29	42	57	85
30	30	47	29	55	30	43	57	85
32	32	50	29	55	32	46	72	100
35	35	52	29	55	35	52	72	100
36	36	55	29	55	36	55	72	100

2. **延长杆**
   工作空间有限时，或所备的套筒难于碰到所要旋紧的螺母时，使用延长杆是极其方便的。

> **注意：**
> 使用延长杆时，与普通转矩相比，旋紧转矩会稍微变小。因此，要想获得同样的转矩，需操作较长的时间。

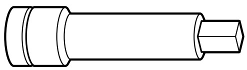

3. **万向接头**
   套筒和扳手之间有一角度时，或操作空间非常小时，使用万向接头来冲击螺母是极其方便的。

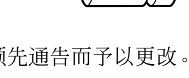

选购附件可能不预先通告而予以更改。

用　途

○ 各种螺栓、螺母的旋紧或旋松。

作 业 之 前

1. **电源**
   确认所使用的电源与工具铭牌上标示的规格是否相符。
2. **电源开关**
   确认电源开关是否切断。若电源开关接通，则插头插入电源插座时电动工具将出其不意地立刻转动，从而招致严重事故。
3. **延伸线缆**
   若作业场所移到离开电源的地点，应使用容量足够、装合适的延伸线缆，并且要尽可能地短些。
4. **边柄的固定**
   装配在锤盒上的边柄位置可通过旋松边柄来改变（右侧的螺丝）。工作时，请将边柄旋转至所要的位置，并拧紧。

5. **选择合适的套筒**

(1) 插销、O型套环（**图 1**）

请选择一个大小与需要旋紧或者旋松的螺栓相配的套筒。将其插进扳手的铁砧后，再用插销和套环将其固定住。拆卸套筒时，请按照与上述相反顺序进行操作。

(2) 活塞式（**图 2**）

将位于铁砧正方形部位上的活塞与六角插槽上的孔对准。然后压下活塞，将六角插槽安装在铁砧上。检查活塞和孔是否彻底结合。当拆卸插槽时，按相反顺序操作。

使 用 方 法

1. **开关的操作（图 3）**

此工具上的开关具有开关马达及转换马达旋转方向的功能。将开关设于标志在把手上的 "R" 位置时，马达朝着顺时针方向旋转而旋紧螺栓。将开关设于 "L" 位置时，马达朝着逆时针方向旋转而旋松螺栓。而松开开关时，马达便停止旋转。

注意：

改变扳手的旋转方向之前，请关掉开关并等到马达完全停止。如在马达旋转时进行开关操作的话，将就会烧毁马达。

2. **旋紧或旋松螺栓**

请事先选择一个与螺栓或螺母配套的六角套筒，然后将此套筒装配在铁砧上，并用六角套筒扣住所要旋转的螺母。将扳手对准螺栓，然后按下电源开关冲击螺母数秒钟。如果螺母一直不能被紧固地固定在螺栓上，则说明螺栓跟着螺母一起在转。这时，请停止冲击，用另一个扳手固定住螺栓头部然后再重新冲击或用手旋紧螺栓和螺母以防它们滑动。

操作时的注意事项

1. **确保线电压（图 4）**

有效旋紧转矩会受到线电压的影响。电压的减少会降低有效旋紧转矩。

例如：如果您在200伏电压环境下使用220伏型扳手时，转矩会降低至70%到90%。需要使用电源延长线时，应尽量使用短的延长线。当线电压较低同时又要使用长的电源延长线时，请使用升压变压器。线电压与旋紧转矩之间的关系如各图所示。

2. **在连续操作时不要接触减震器和电动锤**

在连续旋转上紧过程中减震器和电动锤会变热，所以在这过程中务必要小心不要接触它们。

3. **使用最佳旋紧转矩**

最适合螺母和螺栓的旋紧转矩因螺母和螺栓的材料、尺寸而导。对小的螺栓施加过大的旋紧转矩会导致螺栓的变形或断裂。旋紧转距随着操作时间的增加而增大，请正确掌握对螺栓的操作时间。

4. **选择与螺栓相配的套筒**

注意要选择使用与螺栓相配的套筒，使用不相配的套筒时，不仅会影响旋紧力，还会使套筒或螺母受损。

如使用已损坏了的、或已变形的六角或四角套筒，由于无法得到适当的旋紧力，因而会导致旋紧转矩的损失。

请注意套筒内部的磨损，并请在磨损程度加重之前更换之。和螺栓尺寸配套的套筒示于**表1**。

套筒牌号处的数值表示六角型孔的一边到另外一边的距离（S）。

5. **扳手的拿法**

请用双手紧紧地握住冲击扳手的主柄和边柄。并将扳手对准螺栓。

没有必要对扳手施加太大的力，只需施加可抵消冲击力的力即可。

6. **确保施紧转矩**

以下各个因素与旋紧转矩相关。为了确保旋紧转矩，必须在开始操作之前先用普通的扳手把螺栓旋紧。

与旋紧转矩相关的因素如下：

(1) 线电压

旋紧转矩会随着线电压的降低而减小。

（请参考 **图 4**）

(2) 操作时间

旋紧转矩会随着操作时间的增加而增大。但是，旋紧转矩达到临界值后，即使操作时间再长旋紧转矩也不再增大。（请参考 **图 4**）

(3) 螺栓的直径

旋紧转矩会因螺母的直径而导（请参考 **图 4**）。通常，螺母的直径越大，旋紧转矩便也越大。

(4) 旋紧条件

即使螺纹尺寸相同，旋紧转矩也因转矩率、螺栓的级别、及螺栓长度而异。另外，各螺栓的金属表面的状况不同也会导致各旋紧转矩相异。

(5) 选购附件的使用

使用延长柄、万向接头、或长的套筒时，旋紧转矩会相对减少。

(6) 套筒的障碍排除

如使用已损坏了的、或已变形的六角或四角套筒，由于无法得到适当的旋紧力，因而会导致旋紧转矩的损失。

使用和螺栓不相配的套筒时，将不能获得足够得旋紧转矩。和螺栓尺寸配套的套筒示于**表1**。

维 护 和 检 查

1. **套筒的检查**

   如使用已损坏了的、或已变形的六角或四角套筒，由于无法得到适当的旋紧力，因而会导致旋紧转矩的损失。请对套筒内部的磨损程度紧行周期检查，必要时请换上新的套筒。

2. **检查安装螺钉**

   要经常检查安装螺钉是否紧固妥善。若发现螺钉松了，应立即重新扭紧，否则会导致严重的事故。

3. **电动机的维护**

   电动机绕线是电动工具的“心脏部”应仔细检查有无损伤，是否被油液或水沾湿。

4. **检查碳刷**

   为了保证长期的安全使用以及避免触电事故的发生，本工具的碳刷检查与更换只能由日立授权的服务中心进行。

5. **维修零部件一览表**

   A：项目号

   B：代码号

   C：使用数

   D：备注

注意：

日立牌电动工具的维修、改造和检查须由经日立公司授权的维修中心进行。

当要求维修或其他保养服务时，若将此零部件一览表与电动工具一起呈交给经日立公司授权的维修中心，将有助于维修或保养工作。

在操作和维修电动工具时，必须遵守贵国制定的安全的有关规则和标准。

改造：

日立牌电动工具经常加以改善和改造以采用最新的先进技术。

因此，某些零部件〔例如代码号和（或）设计〕可能变更，恕不另行通知。

注：

为求改进，本手册所载规格可能不预先通告而予以更改。

GENERAL SAFETY RULES

WARNING!
Read all instructions
Failure to follow all instructions listed below may result in electric shock, fire and/or serious injury.
The term "power tool" in all of the warnings listed below refers to your mains operated (corded) power tool or battery operated (cordless) power tool.

SAVE THESE INSTRUCTIONS

1) **Work area**
   a) **Keep work area clean and well lit.**
   Cluttered and dark areas invite accidents.
   b) **Do not operate power tools in explosive atmospheres, such as in the presence of flammable liquids, gases or dust.**
   Power tools create sparks which may ignite the dust of fumes.
   c) **Keep children and bystanders away while operating a power tool.**
   Distractions can cause you to lose control.

2) **Electrical safety**
   a) **Power tool plugs must match the outlet.**
   Never modify the plug in any way.
   Do not use any adapter plugs with earthed (grounded) power tools.
   Unmodified plugs and matching outlets will reduce risk of electric shock.
   b) **Avoid body contact with earthed or grounded surfaces such as pipes, radiators, ranges and refrigerators.**
   There is an increased risk of electric shock if your body is earthed or grounded.
   c) **Do not expose power tools to rain or wet conditions.**
   Water entering a power tool will increase the risk of electric shock.
   d) **Do not abuse the cord. Never use the cord for carrying, pulling or unplugging the power tool. Keep cord away from heat, oil, sharp edges or moving parts.**
   Damaged or entangled cords increase the risk of electric shock.
   e) **When operating a power tool outdoors, use an extension cord suitable for outdoor use.**
   Use of a cord suitable for outdoor use reduces the risk of electric shock

3) **Personal safety**
   a) **Stay alert, watch what you are doing and use common sense when operating a power tool.**
   Do not use a power tool while you are tired or under the influence of drugs, alcohol or medication.
   A moment of inattention while operating power tools may result in serious personal injury.
   b) **Use safety equipment. Always wear eye protection.**
   Safety equipment such as dust mask, non-skid safety shoes, hard hat, or hearing protection used for appropriate conditions will reduce personal injuries.
   c) **Avoid accidental starting. Ensure the switch is in the off position before plugging in.**
   Carrying power tools with your finger on the switch or plugging in power tools that have the switch on invites accidents.
   d) **Remove any adjusting key or wrench before turning the power tool on.**
   A wrench or a key left attached to a rotating part of the power tool may result in personal injury.
   e) **Do not overreach. Keep proper footing and balance at all times.**
   This enables better control of the power tool in unexpected situations.
   f) **Dress properly. Do not wear loose clothing or jewellery. Keep your hair, clothing and gloves away from moving parts.**
   Loose clothes, jewellery or long hair can be caught in moving parts.
   g) **If devices are provided for the connection of dust extraction and collection facilities, ensure these are connected and properly used.**
   Use of these devices can reduce dust related hazards.

4) **Power tool use and care**
   a) **Do not force the power tool. Use the correct power tool for your application.**
   The correct power tool will do the job better and safer at the rate for which it was designed.
   b) **Do not use the power tool if the switch does not turn it on and off.**
   Any power tool that cannot be controlled with the switch is dangerous and must be repaired.
   c) **Disconnect the plug from the power source before making any adjustments, changing accessories, or storing power tools.**
   Such preventive safety measures reduce the risk of starting the power tool accidentally.
   d) **Store idle power tools out of the reach of children and do not allow persons unfamiliar with the power tool or these instructions to operate the power tool.**
   Power tools are dangerous in the hands of untrained users.
   e) **Maintain power tools. Check for misalignment or binding of moving parts, breakage of parts and any other condition that may affect the power tools operation.**
   If damaged, have the power tool repaired before use.
   Many accidents are caused by poorly maintained power tools.
   f) **Keep cutting tools sharp and clean.**
   Properly maintained cutting tools with sharp cutting edges are less likely to bind and are easier to control.
   g) **Use the power tool, accessories and tool bits etc., in accordance with these instructions and in the manner intended for the particular type of power tool, taking into account the working conditions and the work to be performed.**
   Use of the power tool for operations different from intended could result in a hazardous situation.

5) **Service**
   a) **Have your power tool serviced by a qualified repair person using only identical replacement parts.**
   This will ensure that the safety of the power tool is maintained.

PRECAUTION
Keep children and infirm persons away.
When not in use, tools should be stored out of reach of children and infirm persons.

PRECAUTIONS ON USING IMPACT WRENCH

1. When using the tool at a hight, make sure that there is nobody below.
2. Use earplugs if using for a long time use.
3. Switch the reversing switch only after the motor has stoped when it is necessary to change the direction of the rotation.
4. Use a step up transformer when a long extension cable is used.
5. Confirm the tightening torque by a torque wrench before use in order to assertain the correct tightening torque to be used.
6. Assemble the socket securely to the impact wrench with the socket pin and ring.
7. Confirm whether the socket has any cracks in it.
8. Always hold the body and side handles of the impact wrench firmly. Otherwise the counterforce produced may result in inaccurate and even dangerous operation.

SPECIFICATIONS

Voltage (by areas)*	(110V, 115V, 120V, 127V, 220V, 230V, 240V) ∿
Power input*	800 W
No load speed	1800 / min
Capacities (size of bolts)	M16 - M22 (High tension bolt) M14 - M24 (Ordinary bolt)
Tightening torque**	Maximum 610N·m (62.2 kg-m)
Angle drive	19 mm
Weight (without cord)	4.8 kg

*Be sure to check the nameplate on product as it is subject to change by areas.
**Tightening the bolt without extension cord at rated voltage.

STANDARD ACCESSORIES

(1) Side handle 1
(2) Case 1
Standard accessories are subject to change without notice.

OPTIONAL ACCESSORIES (sold separately)

1. Variety of sockets
Although the Hitachi Impact Wrench is delivered with only one standard socket, ample sockets are available to cover impact tightening of various sizes and types of bolts.

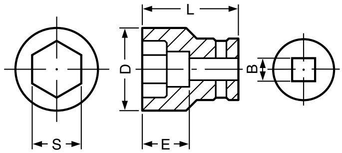

Table 1 B = 19 mm

Socket Designation	Ordinary Socket Dimension (mm)				Long Socket Dimension (mm)			
	S	D	E	L	S	D	E	L
Hex. Socket 22	22	32	32	60				
23	23	38	29	55	23	33	32	60
24	24	40	29	55	24	34	32	60
26	26	42	29	55	26	38	57	85
27	27	43	29	55	27	39	57	85
29	29	45	29	55	29	42	57	85
30	30	47	29	55	30	43	57	85
32	32	50	29	55	32	46	72	100
35	35	52	29	55	35	52	72	100
36	36	55	29	55	36	55	72	100

2. Extension bar
The extension bar is convenient for working in very restricted spaces or when the socket provided cannot reach the bolt to be tightened.

CAUTION
When the extension bar is used the tightening torque is reduced slightly compared with the ordinary socket. So it is necessary to operate the tool a little longer to get the same torque.

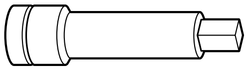

3. Universal joint
The universal joint is convenient for impacting nuts when there is an angle between the socket and wrench, or when working in a very narrow space.

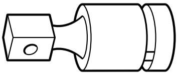

Optional accessories are subject to change without notice.

APPLICATIONS

○ Tightening and loosening various kinds of bolt and nut.

PRIOR TO OPERATION

1. Power source
Ensure that the power source to be utilized conforms to the power requirements specified on the product nameplate.

2. Power switch
Ensure that the power switch is in the OFF position. If the plug is connected to a receptacle while the power switch is in the ON position, the power tool will start operating immediately, which could cause a serious accident.

3. Extension cord
When the work area is removed from the power source, use an extension cord of sufficient thickness an rated capacity. The extension cord should be kept as short as practicable.

4. Fixing the side handle
The position of the side handle attached to the hammer case can be changed by unscrewing the handle. (Right hand screw) Turn the handle to the desired position for the job and secure the handle by screwing up tight.

5. Mounting the socket

(1) Pin, O-ring type **(Fig. 1)**
Select a socket matched to the bolt to be tightened or loosened. Insert the socket on the anvil of the wrench, and secure it with the pin and ring. When dismantling the socket, reverse the sequence.

(2) Plunger type **(Fig. 2)**
Align the plunger located in the square part of the anvil with the hole in the hex socket. Then push the plunger, and mount the hex socket on the anvil. Check that the plunger is fully engaged in the hole. When removing the socket, reverse the sequence.

HOW TO USE

1. Operation of switch (Fig. 3)
The switch in this machine functions as a motor switch and rotational direction selector switch. When the switch is set to R indicated on the handle cover, the motor rotates clockwise to tighten the bolt. When the switch is set to L, the motor rotates counterclockwise to loosen the bolt. When the switch is released, the motor stops.

CAUTION
Be sure to turn the switch OFF and wait until the motor completely stops before changing the direction of wrench revolution. Switching while the motor is rotating will result in burning the motor.

2. Tightening and loosening bolts
A hex socket matching the bolt or nut must first be selected. Then mount the socket on the anvil, and grip the nut to be tightened with the hex socket. Holding the wrench in line with the bolt, press the power switch to impact the nut for several seconds. If the nut is only loosely fitted to the bolt, the bolt may turn with the nut, therefore preventing proper tightening. In this case, stop impact on the nut and hold the bolt head with a wrench before restarting impact, or manually tighten the bolt and nut to prevent them slipping.

OPERATIONAL CAUTIONS

1. Confirm the line voltage (Fig. 4)
The available tightening torque is influenced by line voltage. Reduced line voltage lowers the available tightening torque.
For example, if you use a 220 V type wrench on a 200 V line the available tightening torque will be reduced to 70 to 90 %. When extending the power cord, use an extension cord which is as short as possible. When the line voltage is low and a long extension cord is needed a step up transfomer should be used. The relation between the line voltage and the tightening torque are shown in the figures.

2. Do not touch the bumper or hammer case during continuous operation
The bumper and hammer case become hot during continuous screw tightening so be careful not to touch them at that time.

3. Work at a tightening torque suitable for the bolt under impact
The optimum tightening torque for nuts and bolts differs with material and size of the nuts and bolts. An excessively large tightening torque for a small bolt may strech or break the bolt. The tightening torque increases proportionally to the operating time. Use the correct operating time for the bolt.

4. Selecting the socket to be matched to the bolt
Be sure to use a socket which is matched to the bolt to be tightened. Using an improper socket will result not only in insufficient tightening but also in damage to the socket or nut.
A worn or deformed hex or square-holed socket will not give an adequate tightness for fitting to the nut or anvil, consequently resulting in loss of tightening torque.
Pay attention to wear of socket holes, and replace

before further wear developes. Matching socket and bolt sizes are shown in **Table 1**.
The numerical value of a socket designation denotes the side to side distance (S) of its hex hole.

5. Holding the tool
Hold the Impact Wrench firmly with both hands by the body handle and the side handle. In this case hold the wrench in line with the bolt.
It is not necessary to push the wrench very hard. Hold the wrench with a force just sufficient to counteract the impact force.

6. Confirm the tightening torque
The following factors contribute to a reduction of the tightening torque. So confirm the actual tightening torque needed by screwing up some bolts before the job with a hand torque wrench. Factors affecting the tightening torque are as follows.

(1) Line voltage:
The tightening torque decreases when the line voltage becomes low (See **Fig. 4**).

(2) Operating time:
The tightening torque increases when the operating time increases. But the tightening torque does not increase above a certain value even if the tool is driven for a long time (See **Fig. 4**).

(3) Diameter of bolt:
The tightening torque differs with the diameter of the bolt as shown in **Fig. 4.** Generally a larger diameter bolt has a larger tightening torque.

(4) Tightening conditions:
The tightening torque differs according to the torque ratio; class, and length of bolts even when bolts with the same size threads are used. The tightening torque also differs according to the condition of the surface of metal through which the bolts are to be tightened.

(5) Using optional parts:
The tightening torque is reduced a little when an extension bar, universal joint or a long socket is used.

(6) Clearance of the socket:
A worn or deformed hex or a square-holed socket will not give an adequate tightness to the fitting between the nut or anvil, consequently resulting in loss of tightening torque.
Using an improper socket which does not match to the bolt will result in an insufficient tightening torque. Matching socket and bolt sizes are shown in **Table 1**.

MAINTENANCE AND INSPECTION

1. Inspecting the socket
A worn or deformed hex or a square-holed socket will not give an adequate tightness to the fitting between the nut or anvil, consequently resulting in loss of tightening torque. Pay attention to wear of socket holes periodically, and replace with a new one if needed.

2. Inspecting the mounting screws
Regularly inspect all mounting screws and ensure that they are properly tightened. Should any of the screws be loose, retighten them immediately. Failure to do so could result in serious hazard.

3. Maintenance of the motor
The motor unit winding is the very "heart" of the power tool.
Exercise due care to ensure the winding does not become damaged and/or wet with oil or water.

4. Inspecting the carbon brushes
For your continued safety and electrical shock protection, carbon brush inspection and replacement on this tool should ONLY be performed by a Hitachi Authorized Service Center.

5. Replacing supply cord
If the supply cord of Tool is damaged, the Tool must be returned to Hitachi Authorized Service Center for the cord to be replaced.

6. Service parts list
A: Item No.
B: Code No.
C: No. Used
D: Remarks

CAUTION
Repair, modification and inspection of Hitachi Power Tools must be carried out by a Hitachi Authorized Service Center.
This Parts List will be helpful if presented with the tool to the Hitachi Authorized Service Center when requesting repair or other maintenance.
In the operation and maintenance of power tools, the safety regulations and standards prescribed in each country must be observed.

MODIFICATION
Hitachi Power Tools are constantly being improved and modified to incorporate the latest technological advancements.
Accordingly, some parts (i.e. code numbers and/or design) may be changed without prior notice.

NOTE
Due to HITACHI's continuing program of research and development, the specifications herein are subject to change without prior notice.

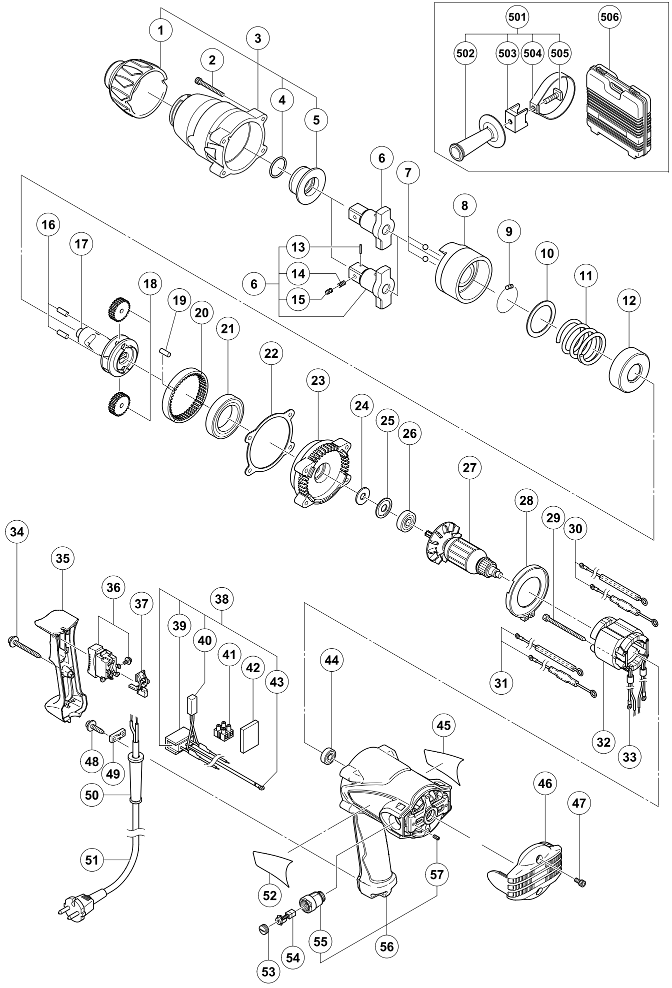

A	B	C	D
1	324-008	1	
2	323-994	4	M5×45
3	324-006	1	"1, 2, 4, 5"
4	971-028	1	P-28
5	324-007	1	
6-1	324-013	1	
6-2	324-021	1	"13-15"
7	959-151	2	D7.14
8	324-005	1	
9	959-155	38	D3.97
10	324-004	1	
11	324-002	1	
12	324-001	1	
13	949-507	1	D2×14 "AUS"
14	992-571	1	"AUS"
15	992-572	1	"AUS"
16	971-016	2	
17	324-003	1	
18	318-448	2	
19	991-449	1	
20	985-303	1	
21	690-8ZZ	1	6908ZZC2PS2L
22	323-995	1	
23	323-999	1	
24	323-996	1	
25	971-012	1	
26	620-0DD	1	6200DDCMPS2L
27-1	360-700C	1	110V
27-2	360-700E	1	220V-230V
27-3	360-700F	1	240V
28	323-998	1	
29	961-400	2	D5×70
30-1	324-017	1	
30-2	324-009	1	"VEN, INA, SYR, KUW, HKG, SIN"
31-1	324-018	1	
31-2	324-010	1	"VEN, INA, SYR, KUW, HKG, SIN"
32-1	340-620C	1	110V
32-2	340-620E	1	220V-230V
32-3	340-620F	1	240V
33	960-354	2	
34	303-694	1	D4×35
35	324-020	1	
36	320-528	1	
37	323-768	1	
38	323-780	1	

A	B	C	D
39	930-153	1	
40	316-186	1	
41	958-308Z	1	
42	324-023	1	
43	961-419Z	1	
44	608-VVM	1	608VVC2PS2L
45	———	1	
46	323-997	1	
47	877-839	2	M5×10
48	984-750	2	D4×16
49	937-631	1	
50-1	953-327	1	D8.8
50-2	938-051	1	D10.1
51	———	1	
52	———	1	
53	935-829	2	
54	999-043	2	
55	957-774	2	
56	324-019	1	"55, 57"
57	938-477	2	M5×8
501	324-015	1	"502-505"
502	980-901	1	
503	323-775	1	
504	324-016	1	
505	980-903	1	M8
506	324-014	1	

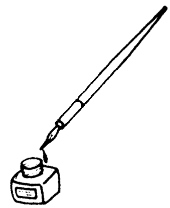

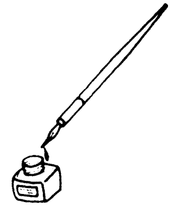

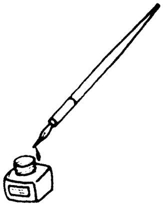

Hitachi Koki Co., Ltd.

412
Code No. C99137621 N
Printed in Japan